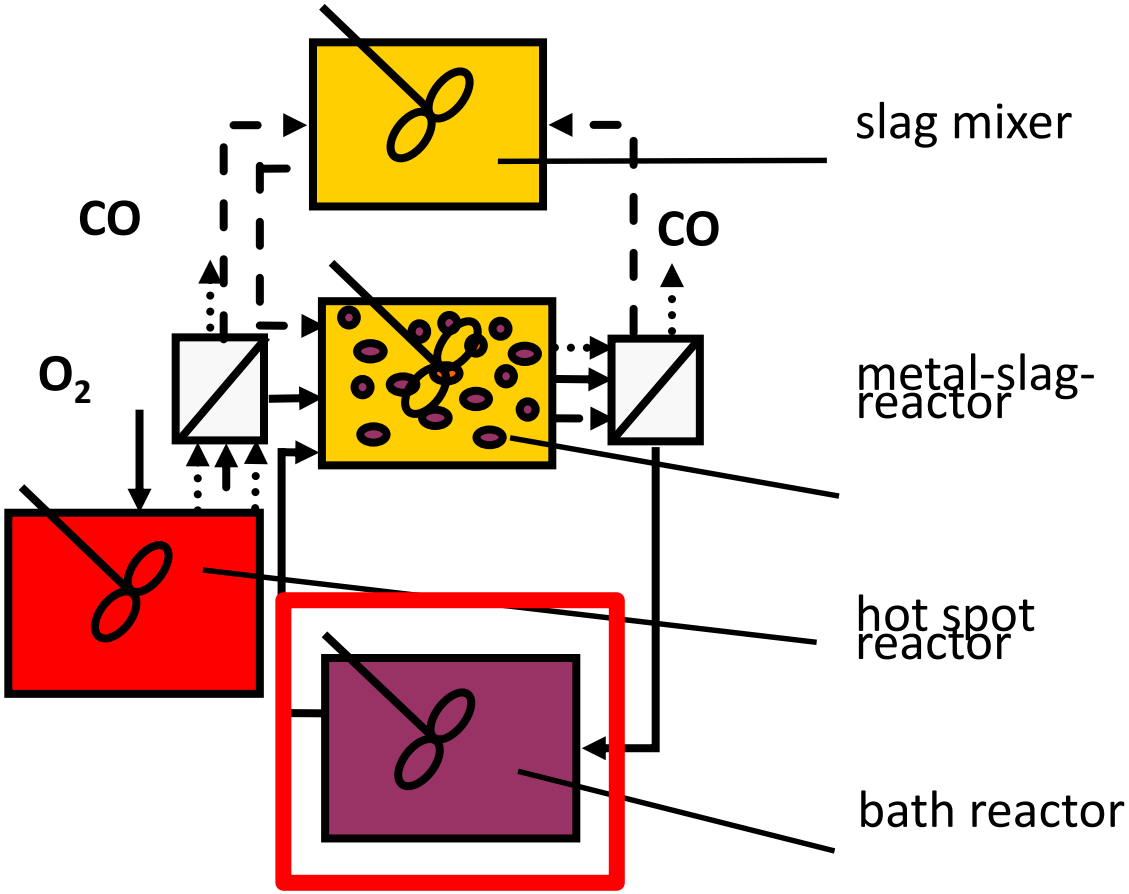
slag mixer
CO
CO
O_2
metal-slag-reactor
hot spot reactor
bath reactor

Bath Reactor

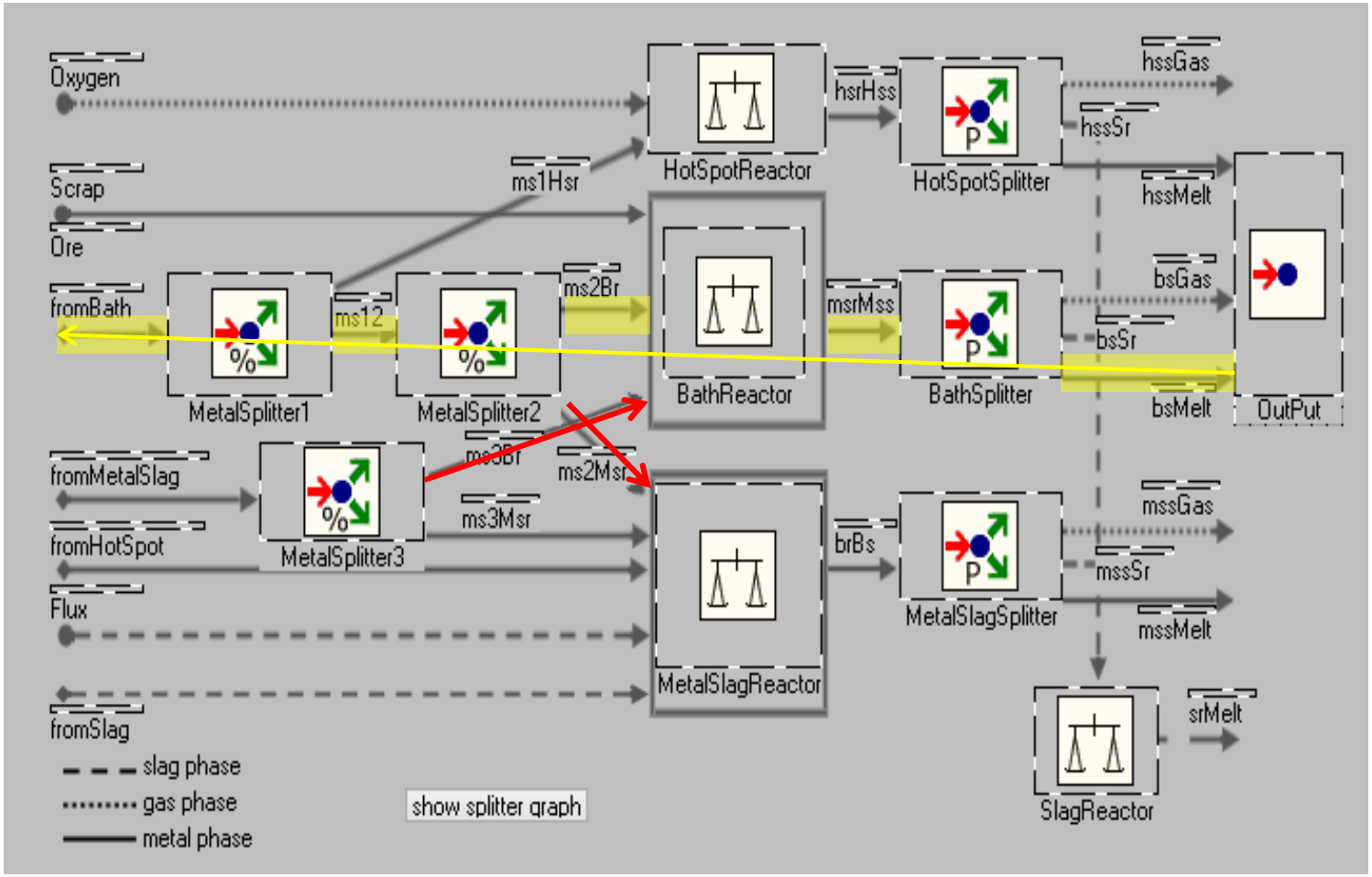

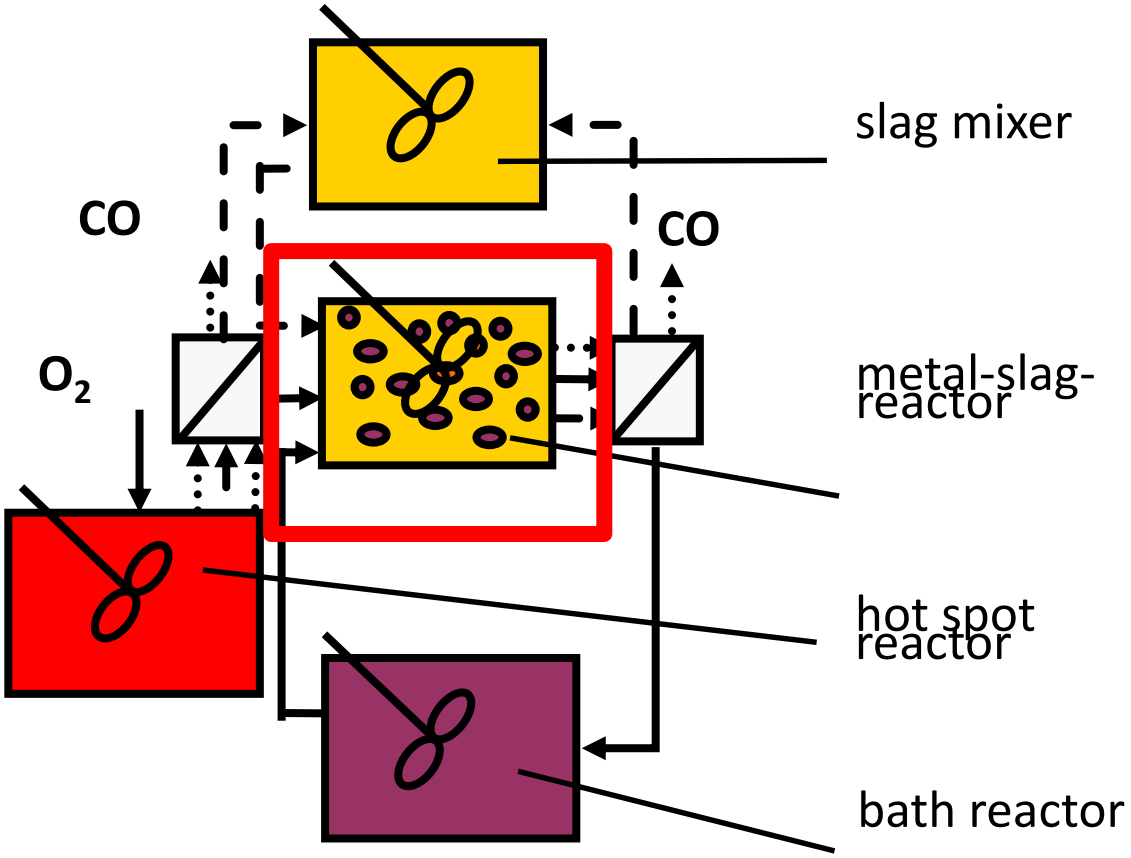
slag mixer
CO
CO
O_2
metal-slag-reactor
hot spot reactor
bath reactor

Metal Slag Reactor

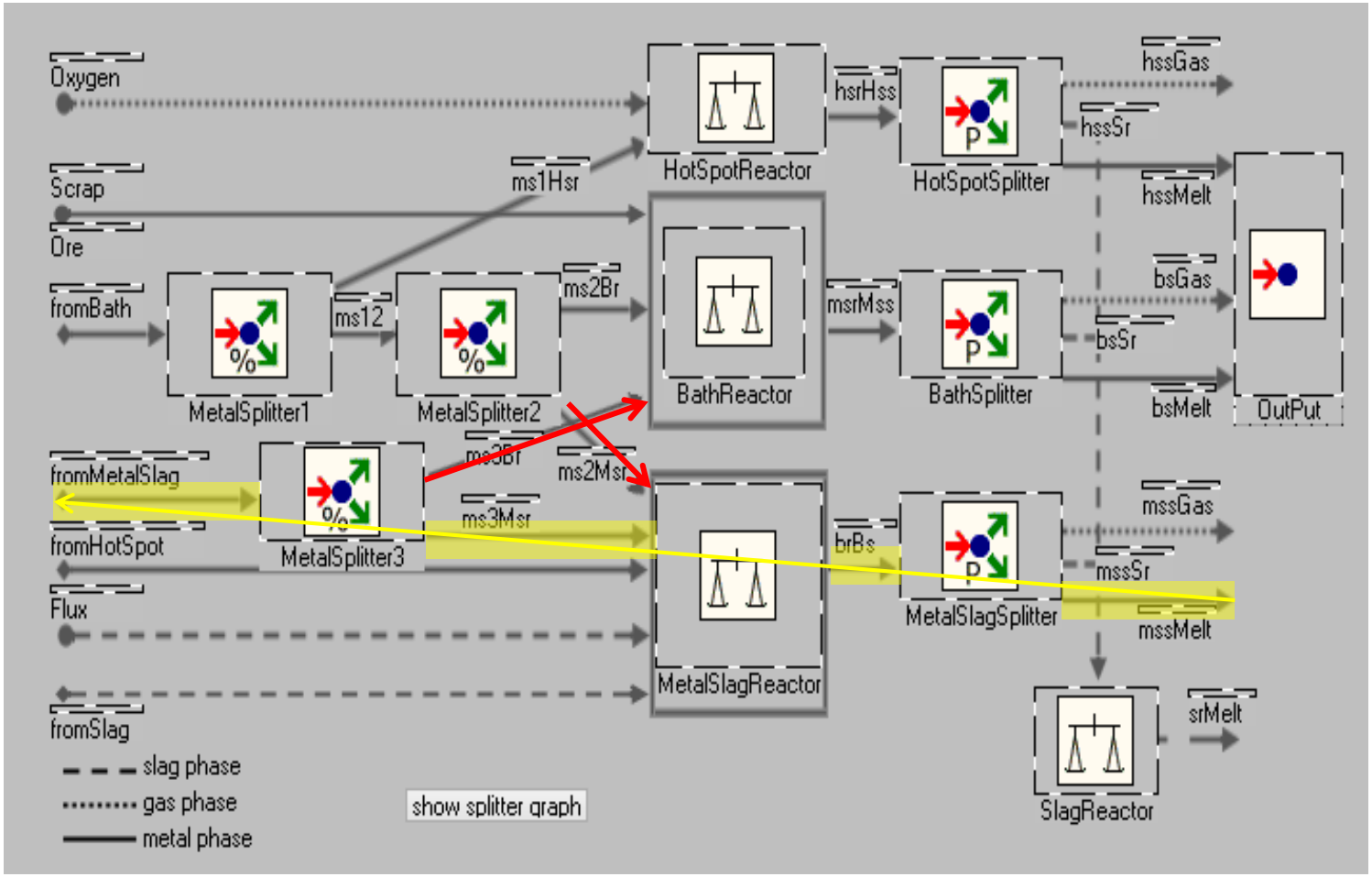

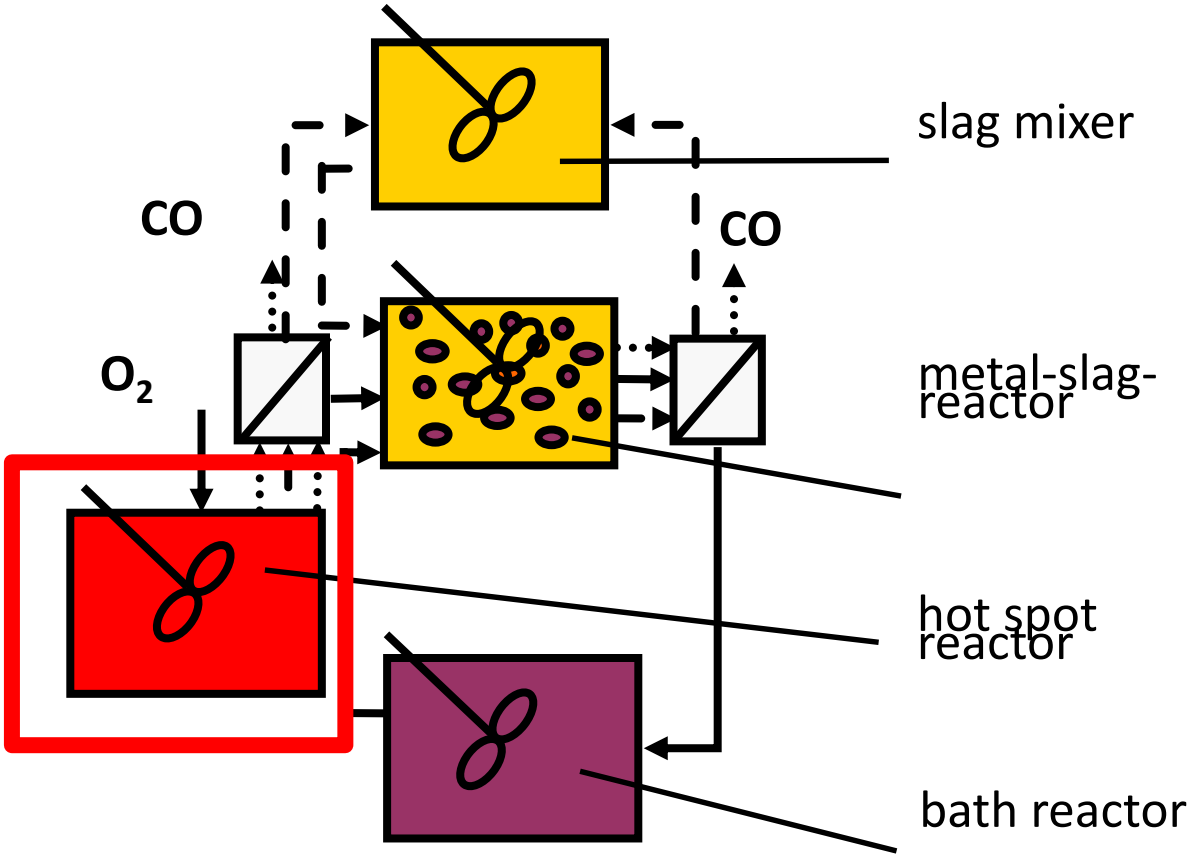
slag mixer
CO
CO
O_2
metal-slag-reactor
hot spot reactor
bath reactor

Hot Spot Reactor no Holdup but …(new iteration step)

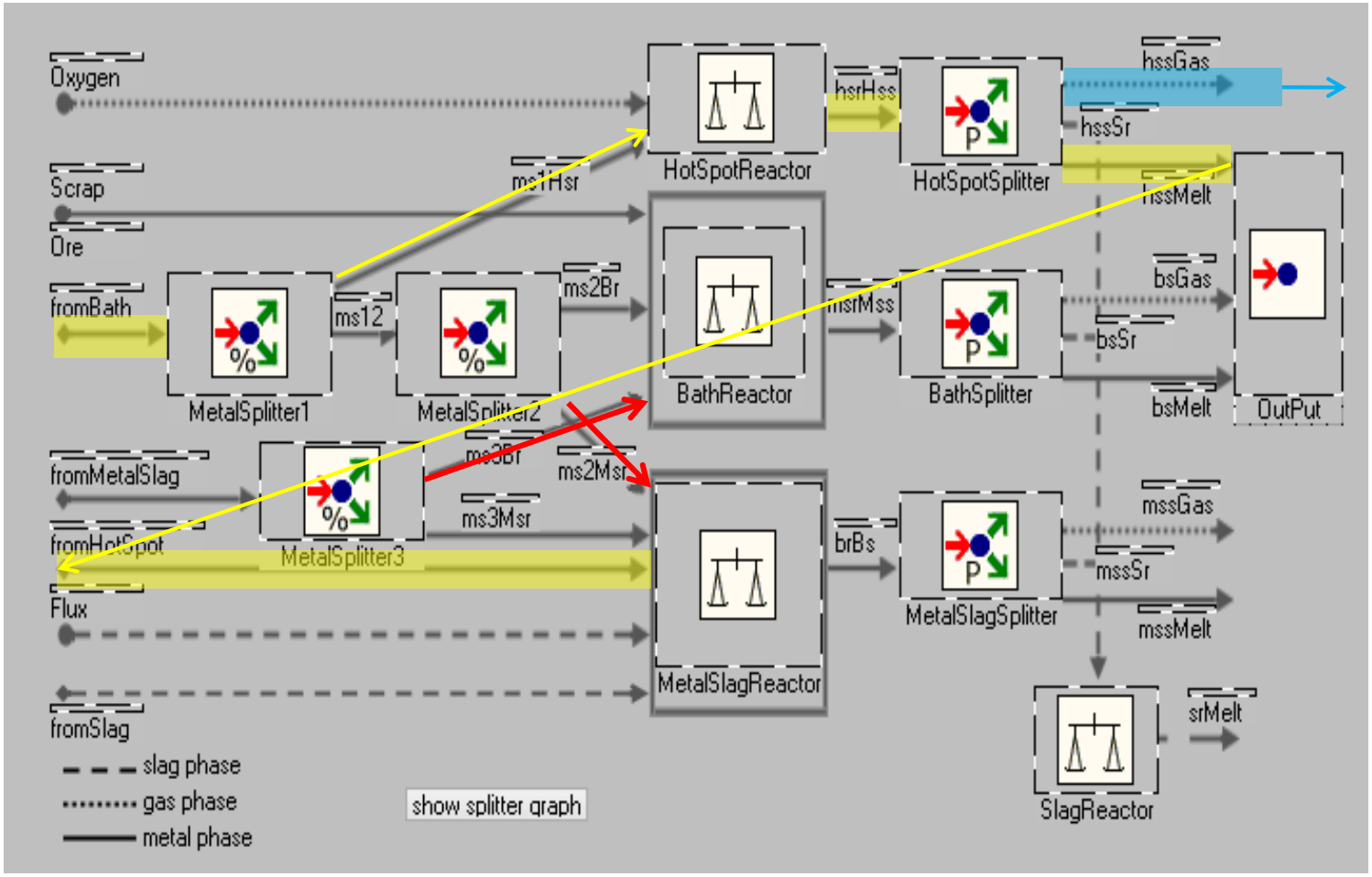

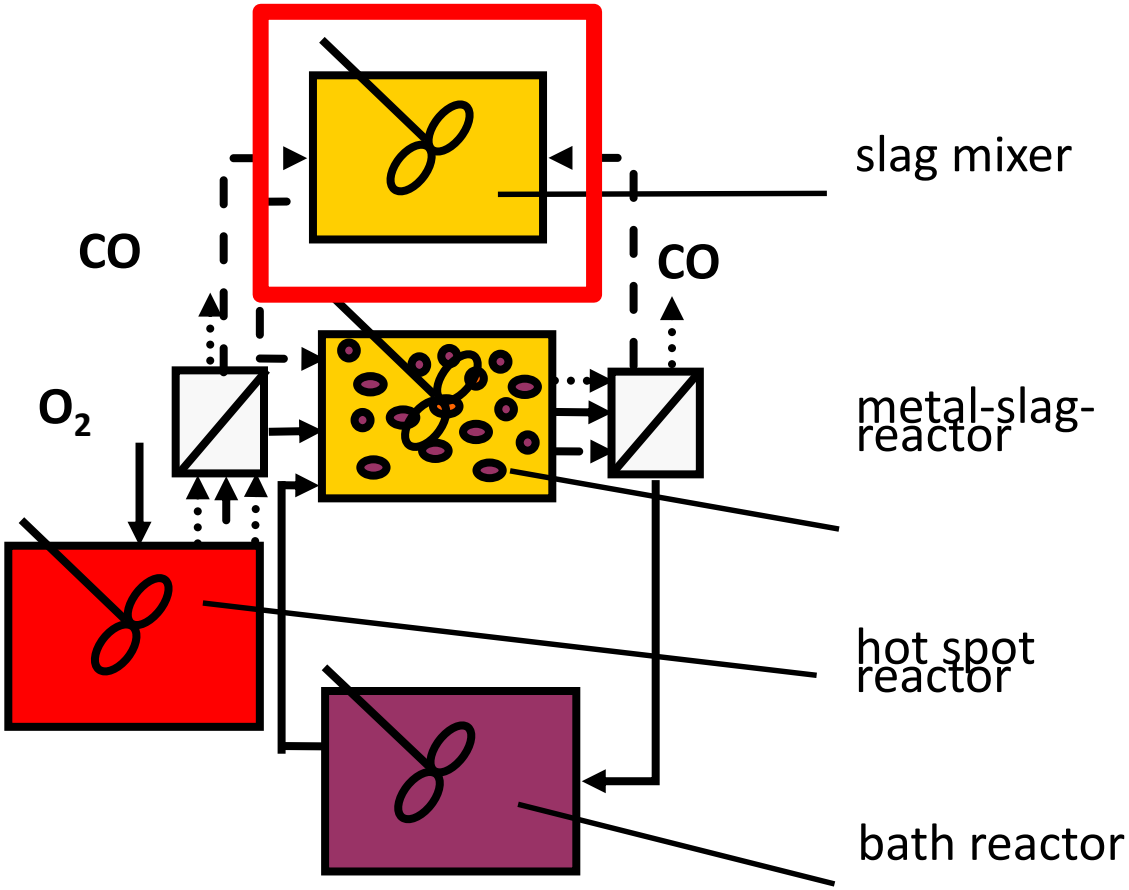
slag mixer
CO
CO
O_2
metal-slag-reactor
hot spot reactor
bath reactor

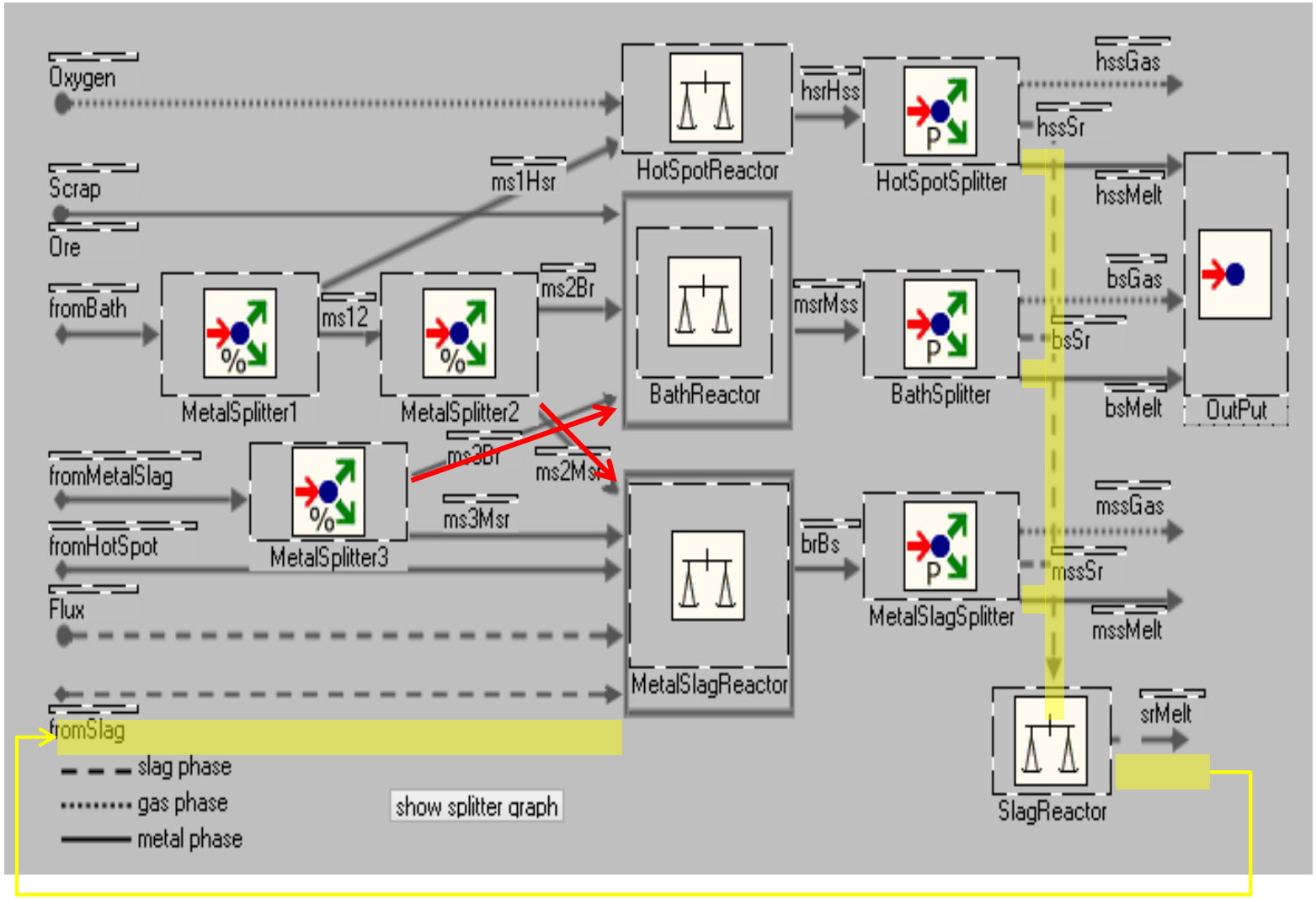

The slag reactor is not required

The residence time in the hot spot reactor is very short.

The flow pattern around a nozzle furthermore suggests that the product gas will pass through the metal slag emulsion before leaving the process.

Hot spot products should enter the Metal Slag reactor in the same time step.

It also makes sense to feed the gas and slag phase of the Bath Reactor to the Metal Slag Ractor in the same time step.

Pattern of Metal Circulation*:

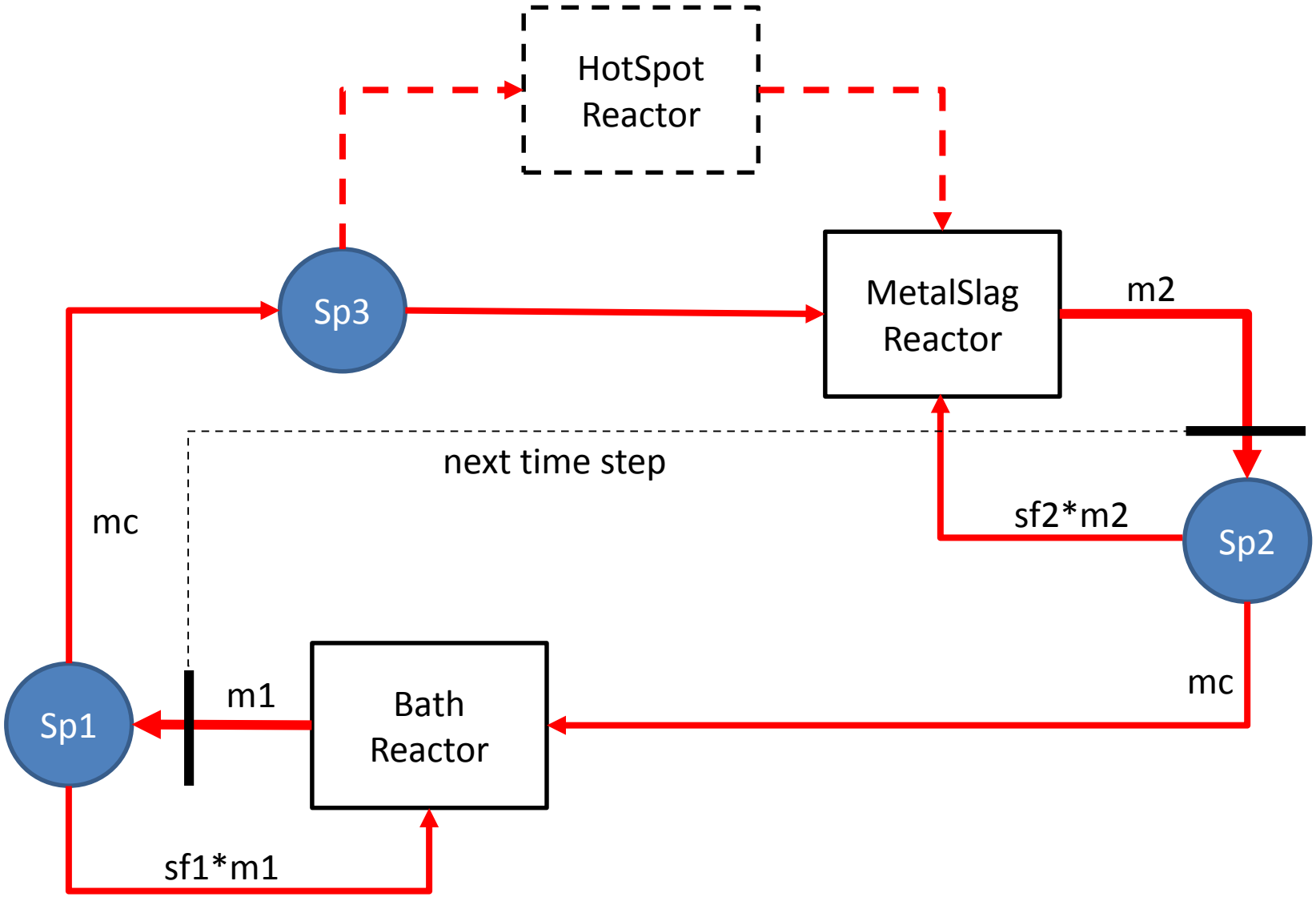

*the contribution of scrap dissolution to m1 is not shown

We obtain:

$$sf1 = 1 - \frac{mc}{m1} \qquad sf2 = 1 - \frac{mc}{m2}$$

mc = circulation rate * Δt with Δt as iteration time step

Since mc cannot exceed m1 or m2 high circulation rates will require small Δt .

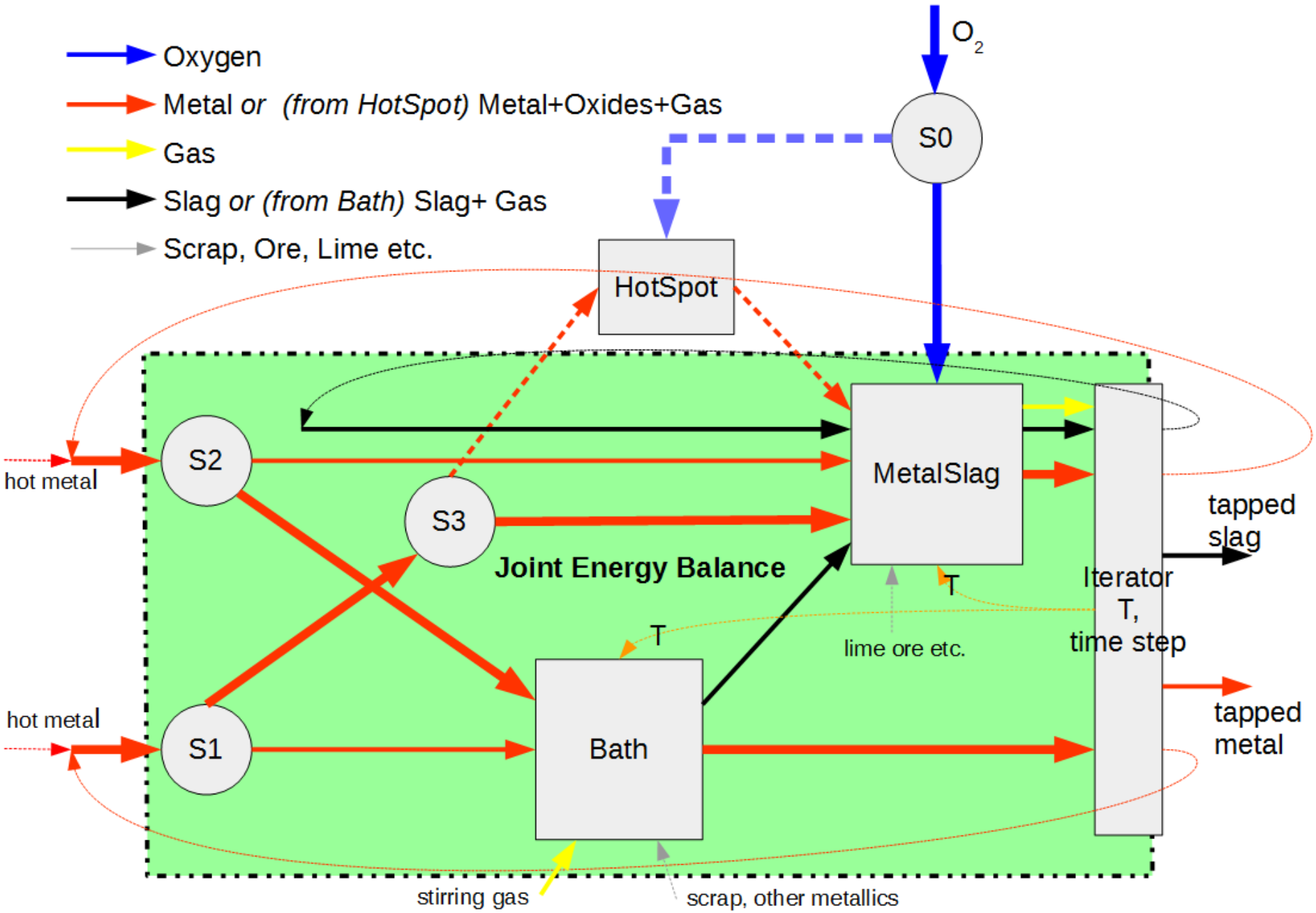
Oxygen
Metal *or* *(from HotSpot)* Metal+Oxides+Gas
Gas
Slag *or* *(from Bath)* Slag+ Gas
Scrap, Ore, Lime etc.
O_2
S0
HotSpot
S2
S3
S1
MetalSlag
Bath
Joint Energy Balance
T
T
lime ore etc.
Iterator
T,
time step
hot metal
hot metal
tapped
slag
tapped
metal
stirring gas
scrap, other metallics

Solution model structure

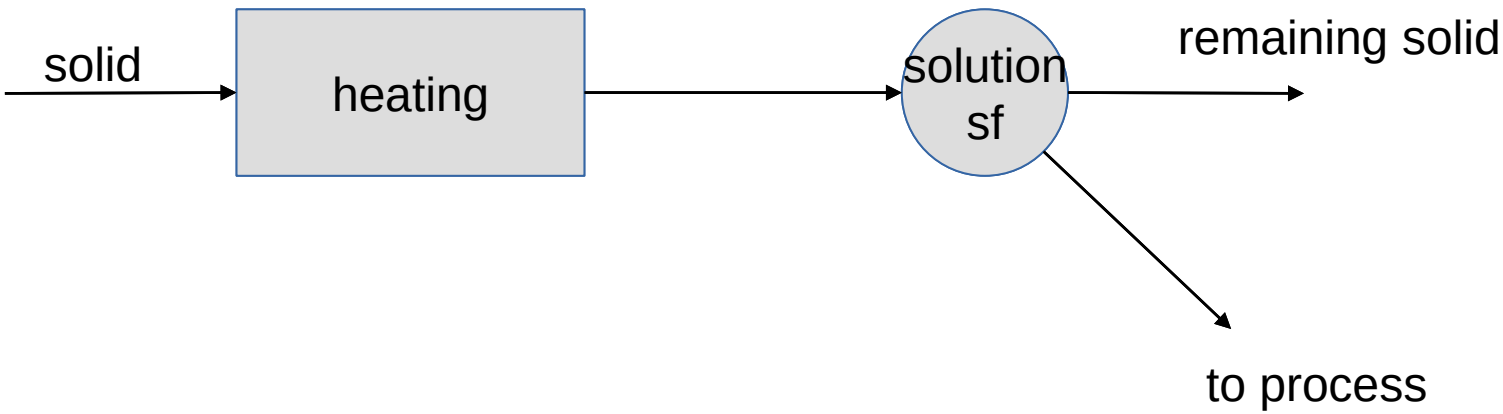

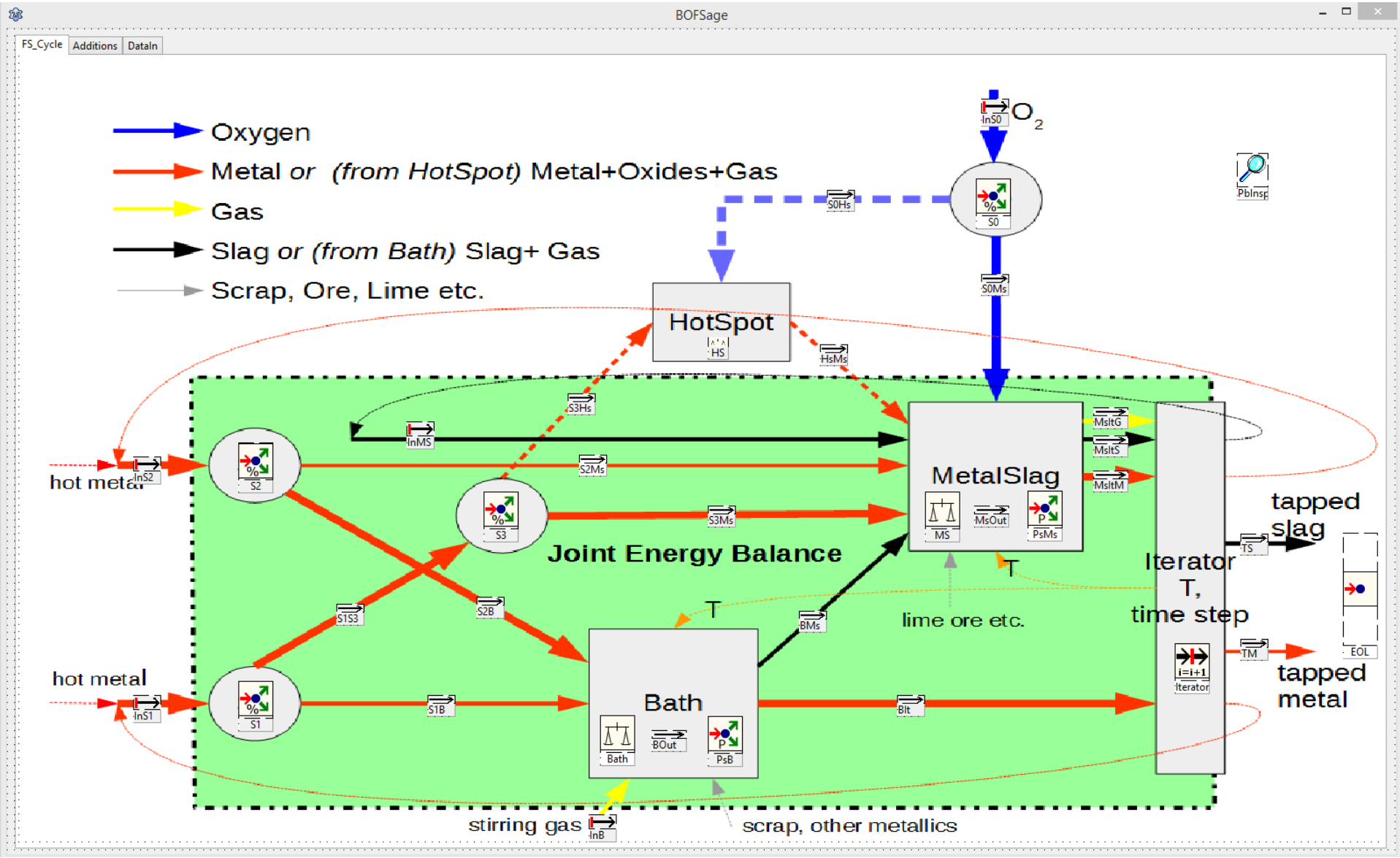
BOFSage
FS_Cycle
Additions
DataIn
Oxygen
Metal or (from HotSpot) Metal+Oxides+Gas
Gas
Slag or (from Bath) Slag+ Gas
Scrap, Ore, Lime etc.
O2
InS0
S0
S0Hs
S0Ms
PbInsp
HotSpot
HS
HsMs
S3Hs
InMS
S2Ms
S3Ms
hot metal
InS2
S2
S3
Joint Energy Balance
MetalSlag
MS
MsOut
PsMs
MsltG
MsltS
MsltM
tapped slag
TS
Iterator
T,
time step
i=i+1
Iterator
TM
EOL
tapped metal
T
lime ore etc.
S1S3
S2B
BMs
hot metal
InS1
S1
S1B
Bath
BOut
PsB
Blt
stirring gas
InB
scrap, other metallics

Is this modelling approach only applicable where macroscopic flow dominates?

- successful SimuSage cell-type models by IVT
  which uses CAD for the determination of macroscopic flows

- but the successful modelling of the progress of decarburisation
  Does not prove that macroscopic flows alone are rate controlling

- nature of kinetic processes:

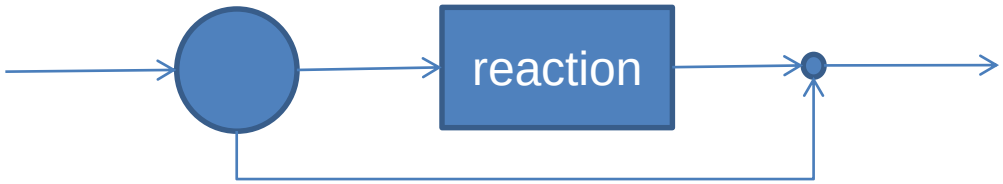

- the converter model presented is essentially a mixing process
  A mixing process with constant split factors leads to a
  first order differential equation. Reversely 1st order kinetics can
  be represented as an analogous mixing problem in this case.
  SimuSage is not restricted to constant split factors.

Die Gesamtmenge Metall ist die Summe der Metallmenge in den Reaktoren:

mg = m1 + m2 (1)

Die Metallbilanz über die Reaktoren ergibt

m1 = mu + sf1*m1 (2)

und

m2 = mu + sf2*m2 (3)

(3) und (2) in (1) ergibt (4):

$$\frac{mu}{mg} = \frac{1}{\frac{1}{1-sf1} + \frac{1}{1-sf2}}$$

(4) und (3) führen zu (5)

$$\frac{m2}{mg} = \frac{1}{1-sf2} * \frac{1}{\frac{1}{1-sf1} + \frac{1}{1-sf2}}$$

$$sf1 = 1 - \frac{mu}{mg - m2}$$

$$sf2 = 1 - \frac{mu}{m2}$$

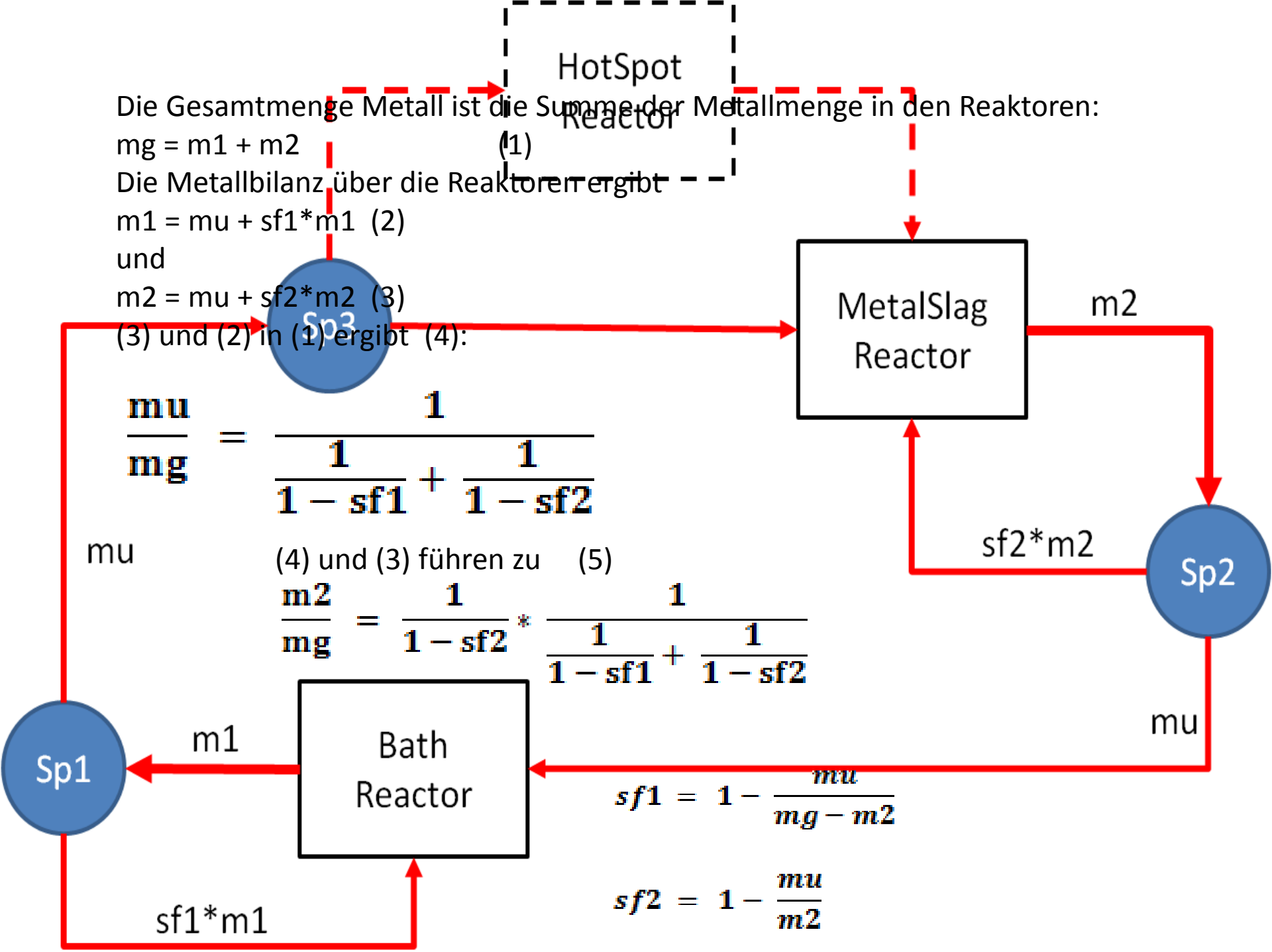

Aus 0 <= sf1, sf2 <= 1 folgt mu <= min(m2, mg-m2).

Es gilt

Umlaufrate = mu / Δt.

Höhere Umlaufraten führen zu kleineren Zeitschritten, sobald die Grenze für mu erreicht ist.

Um in dem "Bild" der makroskopischen Strömung zu bleiben:

Wir können die Splitfaktoren durch Vorgabe von Umlaufrate und "Größe" der Hauptreaktionszone bei geeigneter Wahl des Zeitschrittes bestimmen.

Eine "Vergrößerung" des MetallSchlackeReaktors und eine Erhöhung der Umlaufrate beschleunigen beide die Annäherung an das Gleichgewicht, jedoch bedeutet ein größerer MetalSchlacke Reaktor

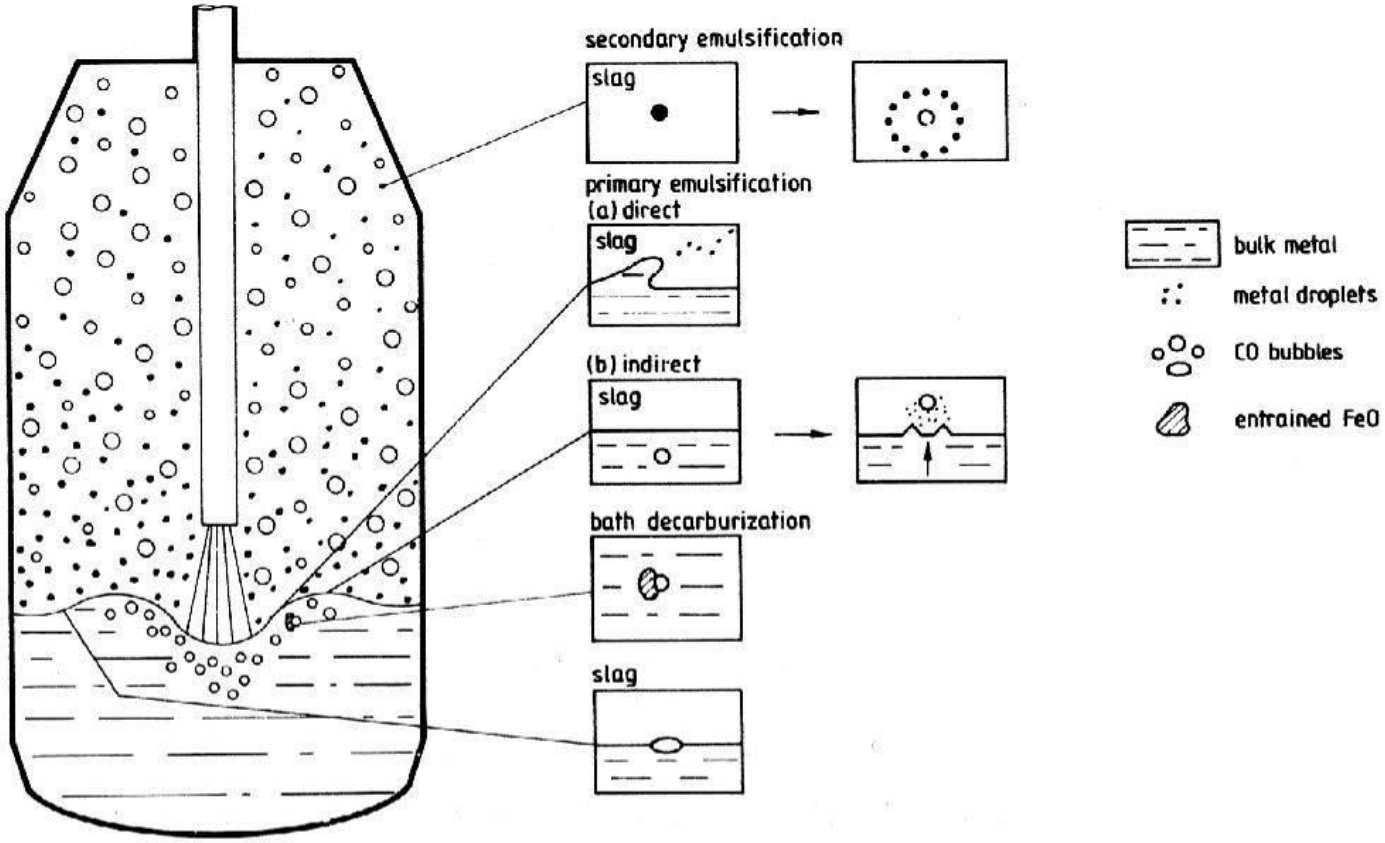
secondary emulsification
slag
primary emulsification
(a) direct
slag
(b) indirect
slag
bath decarburization
slag
bulk metal
metal droplets
CO bubbles
entrained FeO

silicon oxidation at the begin of oxygen blowing $[Si] + 2\,[O] \Leftrightarrow (SiO_2)$

iron slagging (partly) $[Fe] + [O] \Leftrightarrow (FeO)$

manganese slagging $[Mn] + [O] \Leftrightarrow (MnO)$

phosphor burn off $2\,[P] + 5\,[O] \Leftrightarrow (P_2O_5)$

slag enrichment with the oxygen $2\,(FeO) + [O] \Leftrightarrow (Fe_2O_3)$

phosphor stabilisation in the slag by the lime $3\,(CaO) + (P_2O_5) \Leftrightarrow (CaO)_3\,(P_2O_5)$

main decarburisation $[C] + [O] \Leftrightarrow \{CO\}$

partly post combustion $\{CO\} + [O] \Leftrightarrow \{CO_2\}$

all reaction with [O] can also proceed with $^1/_2\,\{O_2\}$ from gas phase